GEOLOGIC MAP OF THE LOBO SPRINGS QUADRANGLE, CIBOLA COUNTY, NEW MEXICO

Fraser Goff[1], Shari A. Kelley[2], Kate Zeigler[1], Paul Drakos[3], and Cathy J. Goff[4]

[1]Earth and Planetary Sciences Dept., University of New Mexico, Albuquerque, NM 87131
[2]NM Bureau of Geology & Mineral Resources, NM Institute Mining and Technology, Socorro, NM 87801
[3]Glorietta Geoscience, Inc., P.O. Box 5727, Santa Fe, NM 87502
[4]Private Consultant, 5515 Quemazon, Los Alamos, NM 87544

INTRODUCTION

Lobo Springs quadrangle lies on the southwest flank of Mount Taylor, an extinct composite volcano in west central New Mexico (Hunt, 1938), and is located 8 km northeast of Grants, New Mexico (Fig. 1). The landscape is dominated by a volcanic highland to elevations of 3100 m (10,200 ft) in the northeast that is flanked by broad mesas and basins to the south, southwest and west. Paved highway NM 547 cuts the northwest corner of the quadrangle whereas Forest Service roads 193, 501, and 400 cross other parts of the quadrangle. The U.S. Forest Service owns most land in the northeast portion of the quadrangle, the U.S. Bureau of Land Management owns much land in the southeastern portion, Acoma Pueblo owns most land in the southwestern portion, whereas small mining claims and small private ranches and homesteads control much of the land in the northwest and south. Most of the land is used either for ranching, recreation, domiciles or hunting. Although no active mining is presently conducted on the quadrangle, past mining or mining potential includes perlite from Grants Ridge, coal from Coal Mine Basin and Upper Rinconada Basin, and sand and gravel from lower Rinconada Basin. We found ample evidence that pre-Columbian inhabitants lived in the quadrangle, particularly in upper Rinconada Basin and on the tops and edges of the high mesas (Shackley, 1998).

Hunt (1938) produced the first geologic map of the region and pointed out the spatial association between the Mount Taylor stratovolcano and surrounding mafic lavas and cinder cones. Sears et al. (1941) described transgressive-regressive depositional relations in Upper Cretaceous sedimentary rocks beneath Mount Taylor. Geologic mapping of 1:24,000 quadrangles began in the 1960s, mainly supporting the regional uranium boom (e.g., Moench, 1963; Moench and Schlee, 1967; Lipman et al., 1979). Crumpler (1980a, 1980b) mapped a portion of Mesa Chivato several kilometers north of Mount Taylor and analyzed many of the lavas, cones and domes. Crumpler (1982, Fig. 4) also published a geologic sketch map of the summit of Mount Taylor. Perry et al. (1990) published a more detailed geologic map of the summit and southwest flank of the volcanic complex. Grimm (1985) mapped geomorphic surfaces and surficial deposits

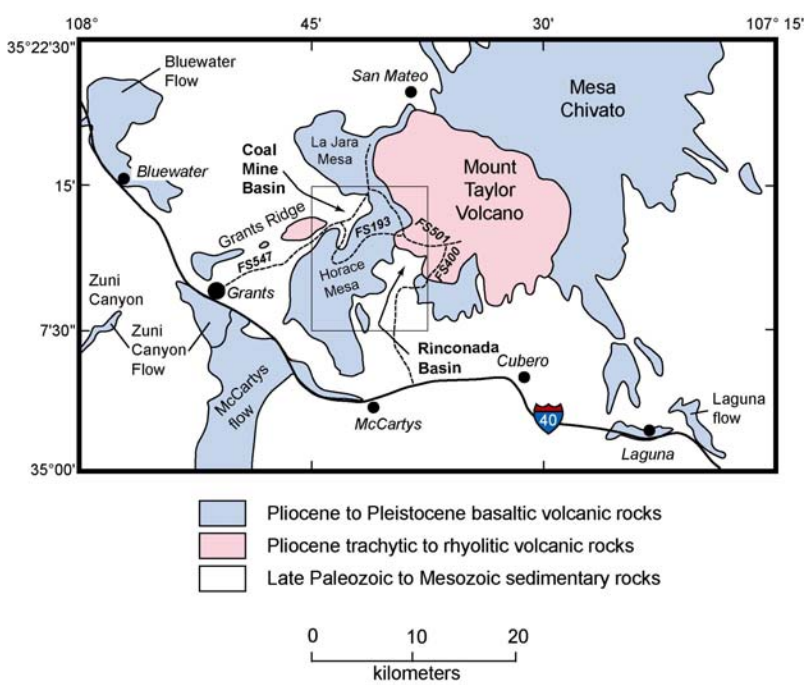

Figure 1: Map showing location of Lobo Springs quadrangle and important physiographic features. Box shows the position of the quadrangle.

in Lobo Canyon and Drake [Drakos] et al. (1991) described geomorphic surfaces and underlying deposits along the Rio San Jose and streams draining southern Mount Taylor. Dillinger (1990) produced a 1:100,000-scale map of the region to support coal investigations. The geochemistry and age of Mount Taylor and Grants Ridge volcanic products has been investigated in numerous reports (Baker and Ridley, 1970; Lipman and Moench, 1972; Crumpler, 1982; Perry et al., 1990; Shackley, 1998).

ACKNOWLEDGEMENTS

Robert Osburn (Washington University, St. Louis) provided considerable geologic input and engaging company while working on adjacent Mount Taylor quadrangle. This geologic map was funded by the State Map Program jointly supported by the U.S. Geological Survey and the New Mexico Bureau of Geology and Mineral Resources. We thank J. Michael Timmons (NMBG&MR) for logistical and tactical support, Frank Perry (Los Alamos National Laboratory) and Larry Crumpler (New Mexico Natural History Museum) for discussions on the volcanology, Darwin R. Vallo (U.S. Department of Agriculture, Grants) for advice on land access and safety and Barry Kues (University of New Mexico) for Cretaceous fossil identifications. Amy Trivett helped us identify and scan well logs housed in the Library of Subsurface Data at the New Mexico Bureau of Geology and Mineral Resources. $Ar^{40/39}$ dates were obtained from the laboratory of NMBG&MR (W. McIntosh and L. Peters). Gordon Keating (Los Alamos National Laboratory) spent time with the first author examining widespread exposures of Grant Ridge tuff. Fieldwork was conducted by standard methods on all lands except Acoma Pueblo. Geology depicted on Acoma lands was obtained and extrapolated from previously published maps, air photography, binoculars, and adjacent geology.

GEOLOGY

The Lobo Springs quadrangle is underlain by a thick, widespread sequence of folded, domed and faulted upper Cretaceous rocks of the southern Colorado Plateau (Fig. 2) having an aggregate thickness of 1070 m (3500 ft). Our mapping utilizes the style and terminology of Hunt (1938) and Lipman et al. (1979). The upper Cretaceous section (Fig. 3) is a regressive sequence, recording a gradual transition from open marine conditions (Mancos Shale) to a marginal marine (Gallup Sandstone, Stray and Dalton Sandstone members of the Crevasse Canyon Formation) and deltaic (Dilco and Gibson Coal members of the Crevasse Canyon Formation) setting. The Mancos Shale is interbedded with the Gallup Sandstone and the Crevasse Canyon Formation. The uppermost formation of the sequence (Gibson Coal) is relatively thick, soft and easily eroded consisting primarily of mudstone, shale and thin sandstones containing coal beds ≤3 m thick (Fig. 4).

The upper Cretaceous sequence in the Mount Taylor region was folded, uplifted and eroded in early to mid Tertiary time forming part of the greater Colorado Plateau. During the last 25 Myr, a structural transition zone has developed between the Colorado Plateau and an extensional zone called the Rio Grande rift. Cretaceous rocks were partially eroded during a period of base level stability and pedimentation in west central New Mexico that lasted from approximately 4 to 2.5 Ma. The Mt. Taylor volcanics were erupted onto this pediment surface. Bryan and McCann (1938) suggested that the erosion surface underlying Mt. Taylor was correlative with the Ortiz surface located in the Rio Grande rift. Beginning in the early Pliocene (roughly 3.8 Ma), volcanism ensued in the region eventually forming a composite intermediate composition stratovolcano at Mount Taylor, flanked by mesas covered with basaltic lavas and cinder cones. This volcanism more or less ceased at about 2 Ma. Since that time, erosion has cut broad basins and shallow canyons into the terrain. The regional Pliocene pediment surface is preserved only where it is capped by basalt flows, such as on Horace Mesa. The most recent description of the magmatic evolution of the

Mount Taylor volcanic field (MTVF) is provided by Perry et al. (1990). Volcanism in the Lobo Springs quadrangle commenced with eruption of a distinctive basanite lava (3.73 to 3.64 Ma) exposed beneath the northeast flanks of Horace Mesa. The source of the basanite is probably buried beneath the Mount Taylor edifice. This was followed by contemporaneous rhyolite dome and pyroclastic eruptions (3.34 to 3.26 Ma)

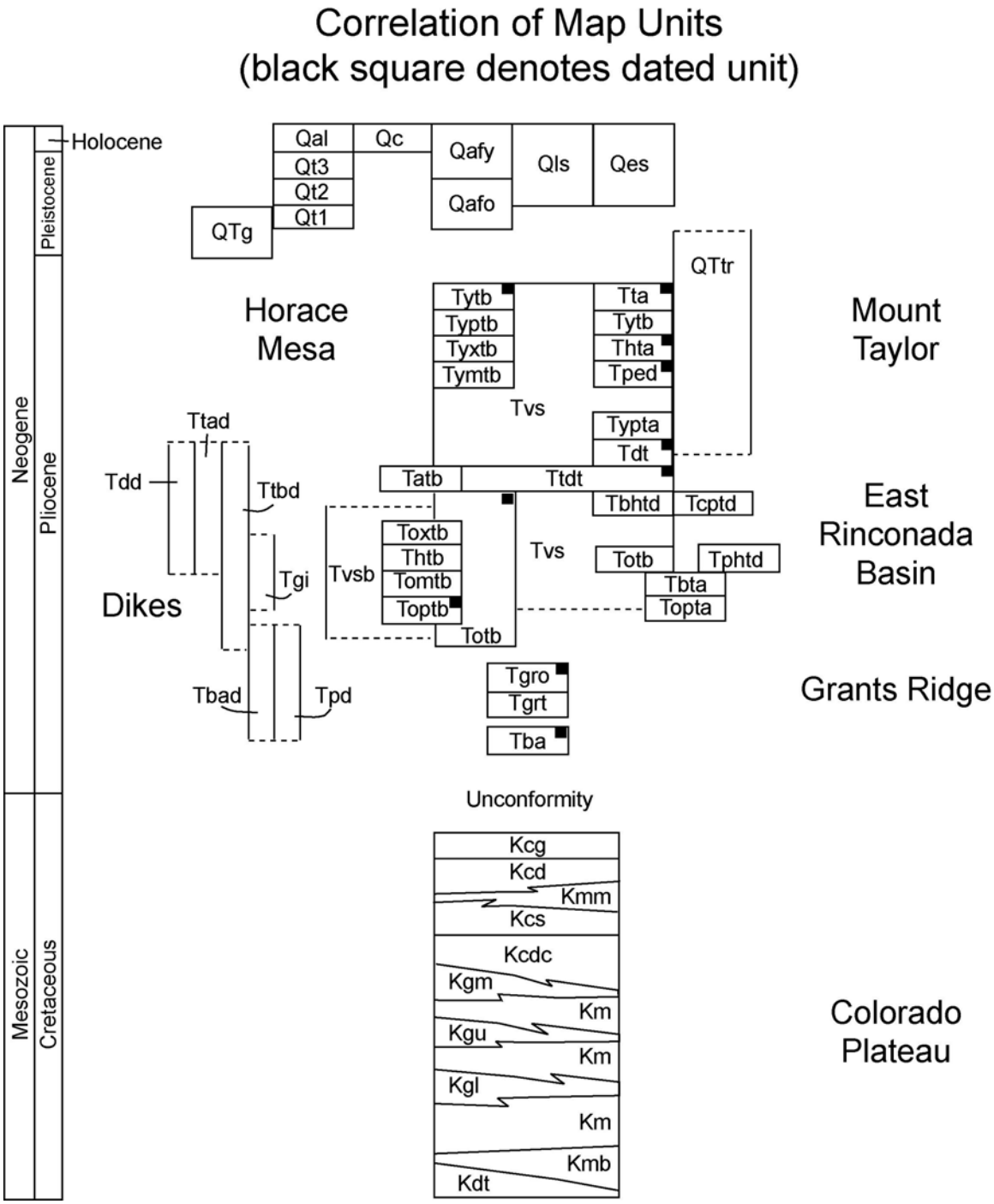

Figure 2: Correlation chart of geologic units mapped during this investigation.

from the Grants Ridge center on the northwest margin of the quadrangle. The pyroclastic deposits (rhyolite tuff of Grants Ridge) are white to pale pink in color and form a discontinuous band at or near the base of mafic flows beneath most mesas in the quadrangle (Fig. 5). They also contain a suite of characteristic lithic fragments (aphyric obsidian, chert, and Precambrian granitoids) that allows identification and mapping of the pyroclastic beds through covered terrain. Both the thickness of beds and average clast size of lithic fragments increase in the direction of Grants Ridge. Within Grants Ridge proper, rhyolite lavas overlie the tuffs (Keating and Valentine, 1998; WoldeGabriel et al., 1999) indicating that both the tuffs and the lavas originate from the same vent area. Based on phenocryst contrasts and slight geochemical differences in obsidians, Shackley (1999) has suggested that the Grants Ridge Tuff originated from rhyolites within Mount Taylor. However, we have found no aphyric rhyolites within the Mount Taylor amphitheater (Osburn and Kelley, person. commun.). A second rhyolite tuff that lacks the distinctive lithic fragments of the tuff of Grants Ridge is exposed in Seco Canyon on the Mount Taylor quadrangle.

Early silicic domes and lavas erupted in the core of Mount Taylor (3.3 to 3.0 Ma) are contemporaneous with older mafic lavas and cones erupted in the southwest part of Horace Mesa (3.29 Ma; Laughlin et al., 1993) and the lower east flank of Mount Taylor (2.89 Ma). The bulk of Mount Taylor formed between 3.0 and 2.5 Ma starting with evolved eruptions, and becoming progressively more intermediate in composition with time. On the Lobo Springs quadrangle, trachydacite lavas exposed in ravines and canyons are overlain by trachyandesite lavas covering the southwestern slopes of Mount Taylor. These intermediate composition lavas are interbedded with mafic lavas and a thick sequence of volcanic sediments in the area where Horace Mesa and Mount Taylor join. A distinctive trachydacite pyroclastic flow (2.71 Ma), is found within the volcaniclastic sediments and represents one of many similar trachydacite tuffs in the sediments that underlie younger lavas throughout the NE portion of the quadrangle. The eroded cone and associated flow on southern La Jara Mesa (2.77 Ma, Fig. 5) overlies a similar trachydacite tuff. Two trachybasalt flows and cones erupted on northeastern Horace Mesa are the youngest volcanic rocks on the quadrangle. The southernmost lava is dated at about 2.0 Ma.

Volcanic rocks in the Mount Taylor area are slightly alkalic. Few units contain primary quartz. Previous workers in this region have variously classified the majority of volcanic rocks as basalt-andesite-rhyolite to hawaiite-latite-trachyte-rhyolite (e.g., Baker and Ridley, 1970; Lipman and Moench, 1972; Crumpler, 1980a; 1980b; Perry et al., 1990). For this map, we are using the widely accepted classification scheme of La Bas et al. (1986) and previously published chemical analyses to rename the volcanic units (Fig. 6). Thus, the alkali basalts (hawaiites) are called trachybasalts, basaltic andesites (muegerites) are called basaltic trachyandesites, andesites (latites) are named trachyandesites, and quartz latites are called trachydacite. The only volcanic rocks with no name changes are the rhyolites and basanites.

Mapping of surficial deposits follows the style and terminology developed by Grimm (1985) and Drake et al. (1991). The Plio-Pleistocene stratigraphy in Mount Taylor area includes two Pliocene units and three widespread Quaternary units that lie above the modern flood plain or arroyo floor. In the Lobo Springs Quadrangle, the Pliocene pediment deposits are poorly exposed and do not form a mapable unit. In adjacent areas, Pliocene deposits are limited to pediment and axial gravel deposits that cap erosional surfaces cut on Cretaceous sedimentary rocks. Pliocene deposits are generally coarse-grained and contain greater proportions of granite and quartzite clasts than are observed in Quaternary deposits (Drake et al., 1991).

Quaternary sediments include fluvial terrace, alluvial fan deposits, and valley floor alluvium (Fig. 7). Quaternary deposits contain a predominance of volcanic clasts; primarily basalt, porphyritic trachyandesite and trachydacite, porphyritic and flow banded rhyolite, and secondary Cretaceous sandstone clasts. Deposits underlying terrace surfaces in Lobo and Rinconada canyons comprise coarse-grained gravelly sediments. The valley floor alluvium is composed primarily of fine-grained sand, silt and clay, but also includes coarse-grained gravelly terrace

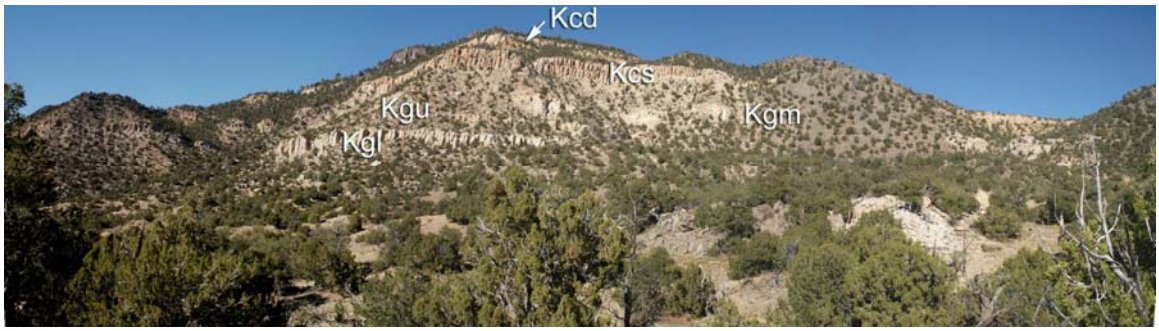

Figure 3: Cretaceous section in the southeastern corner of the Lobo Springs quadrangle. The sandstone units in the section are: Kgl lower tongue of the Gallup Sandstone, Kgu upper tongue of the Gallup Sandstone, Kgm main body of the Gallup Sandstone; Kcs Stray Sandstone, Kcd Dalton Sandstone.

Figure 4: Three-meter-thick coal bed in Gibson Coal Member located on west side of Rinconada Basin. This bed is well exposed along an abandoned dirt track for a distance of 0.5 km (handle of rock hammer is 46 cm long).

Figure 5: Eroded plug and cinder cone exposed in southern wall of La Jara Mesa. Porphyritic trachybasalt (2.77 Myr) intrudes Cretaceous Gibson Coal and 3.26 Myr Grants Ridge Tuff. Lava from this vent overlies 2.9 Myr trachybasalt and a trachydacite tuff about 1.5 km to the east.

surfaces located within a few meters above the valley floor.

The Pliocene and Quaternary deposits and associated geomorphic surfaces in the Mount Taylor area record a history of long-term incision interrupted by relatively brief periods of base level stability (Fig. 8). In contrast to the overall Plio-Quaternary history, the late Quaternary has been characterized by alternating periods of erosion and deposition. Approximately 200 to 300 m of incision has occurred into the Pliocene pediment surface between 2.5 Ma and the present time, likely in response to regional uplift. Periods of erosion and deposition during the late Quaternary are likely in response to climatic fluctuations, continued regional uplift, and/or episodic volcanism in the Zuni Bandera volcanic field periodically blocking drainages (Drake et al., 1991). Periods of temporary base level stability are reflected in the formation of terraces Qt1 (early-middle Pleistocene), Qt2 (middle Pleistocene), and Qt3 (late Pleistocene). Qt1 terrace surfaces in eastern Lobo Canyon project into Grants Canyon, indicating that Grants Canyon was the former lower basin for the stream system originating in upper Lobo Canyon.

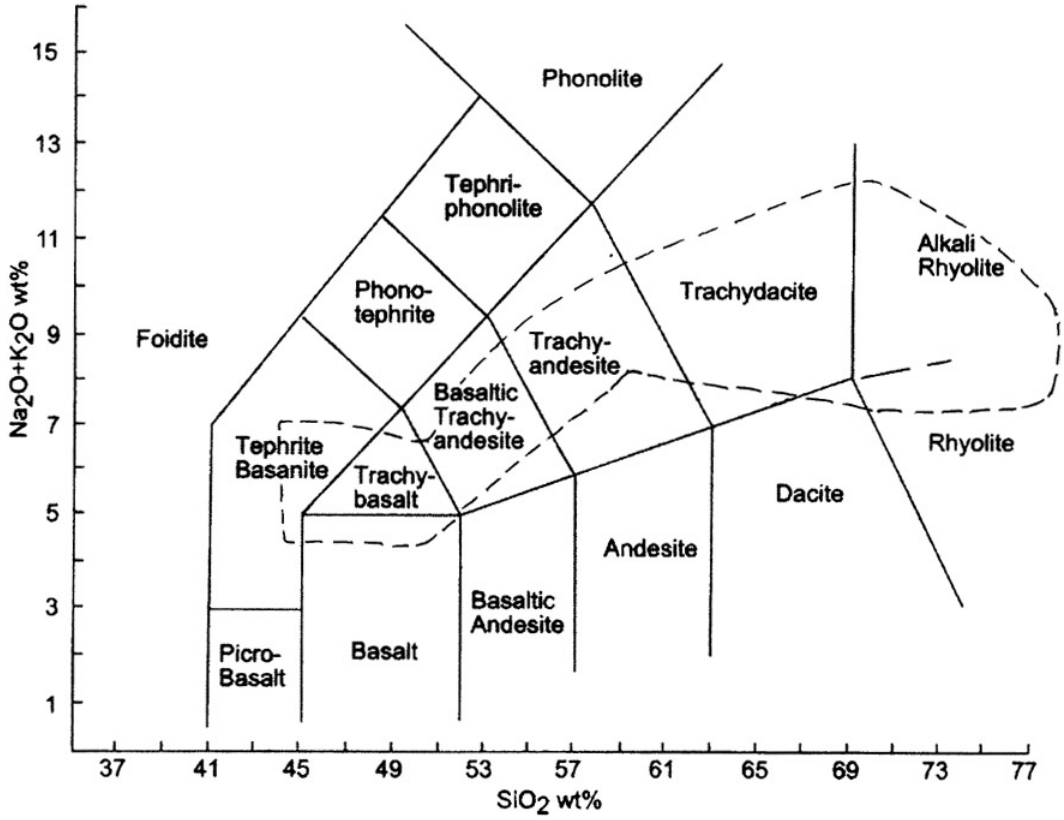

Figure 6: Plot of $Na_2O + K_2O$ versus SiO_2 showing the rock classification scheme of La Bas et al. (1986) and points representing published chemical analyses from the Mount Taylor volcanic field. Most volcanic rocks are slightly alkalic; thus basalts (hawaiites) are named trachybasalt, latites (muegerites) are named trachyandesite, etc. The only rocks whose names are unaffected by this scheme are the rhyolites and basanites.

Figure 7.

Ricnonada Canyon terraces, view looking north.

Regional incision caused oversteepening of slopes which led to slope failure and the creation of large landslide complexes throughout the area. Large rotational slump (toreva) blocks, measuring up to 250 m by 1000 m, occur on hill slopes where competent rocks (sandstone or basalt) overlie incompetent mudstones (Grimm, 1983; 1985). Landslide complexes blocked the drainage in east Grants Canyon, resulting in diversion of the drainage from upper Lobo Canyon to the south toward the north side of East Grants Ridge (Grimm, 1983). This drainage capture occurred between the time of Qt1 and Qt2 formation.

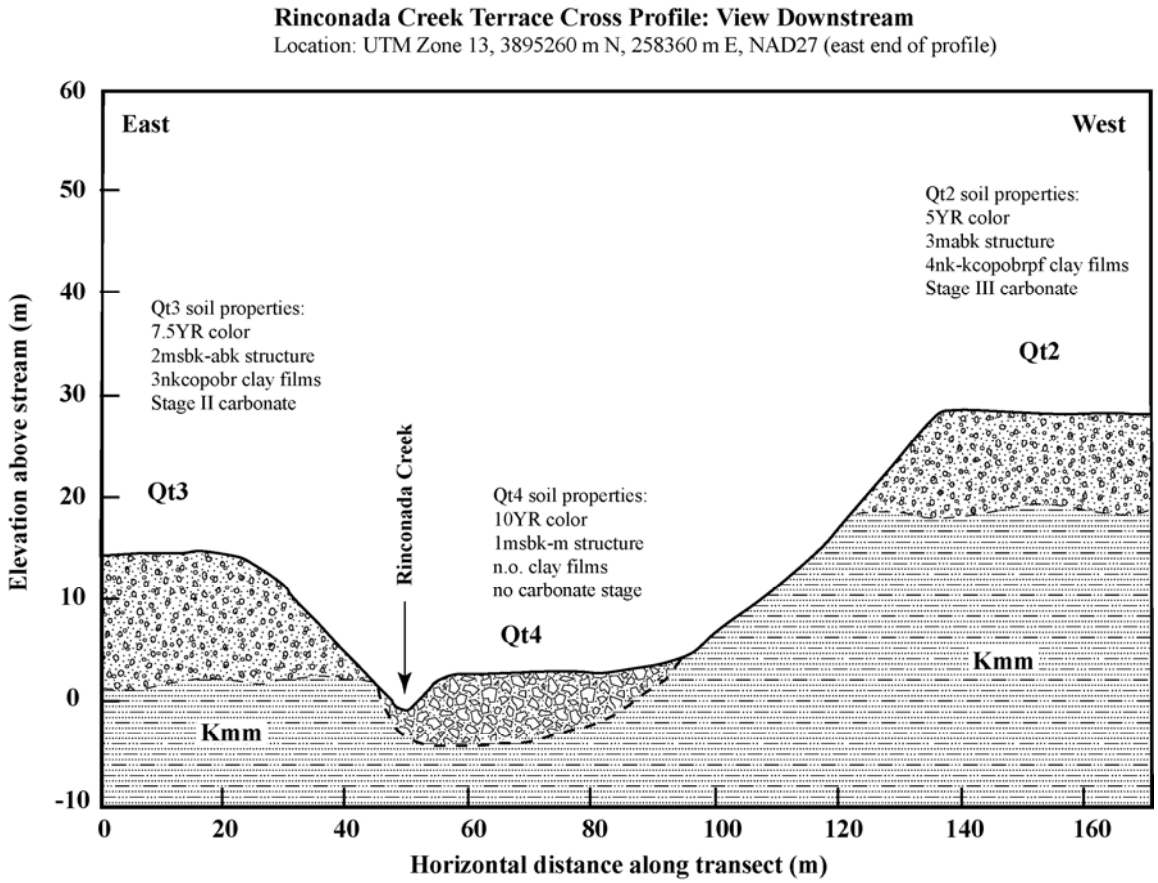

Figure 8.

SOILS

The semiarid climate of the Grants-Laguna area and the influx of windblown carbonate dust have favored the development of carbonate soils. Carbonate morphology and Bt horizon development are the morphologic characteristics that best distinguish soils in the Grants-Laguna region. Soils in the study area exhibit stage I through III carbonate morphology (terminology after Gile et al., 1981 and Machette, 1985). Colors range from 5YR to 10YR, soil structure ranges from massive to strong angular blocky or prismatic, and clay film morphology ranges from absent to thick, continuous (Table 1).

STRUCTURE

The Lobo Springs quadrangle lies on the southeastern margin of the Laramide-age San Juan Basin and is on the western flank of the northeast-striking McCarty syncline of Hunt (1938). The east-dipping monoclinal ridge in the northwestern part of the quadrangle marks the western edge of the McCarty syncline. Several low amplitude folds that strike NW to NE in the Lobo Canyon area are superimposed on the large-scale synclinal structure. These folds do not affect the overlying volcanic rocks and are presumably Laramide in age.

The San Fidel dome (SFD) on the southeastern edge of the quadrangle is an exception to the structures described above. SFD is elongate to the northeast and is bounded by high-angle faults. The northern part of the dome is covered by uplifted lava flows with flows on the flanks of the dome dipping steeply to the northeast, north, and northwest. The flows on the east flank of the

dome are broken by a west-dipping low-angle fault. The cone that is the source of one of these lavas (pyroxene basaltic trachyandesite) lies west of the dome and is 370 m (1200 ft) lower in elevation than the equivalent lava on the summit of the dome. The oldest Cretaceous rocks in the area, the Twowells Member of the Dakota Sandstone and the Bridge Creek Limestone Member of the Mancos Shale, are exposed in a horst block within the dome. The Mancos Shale is metamorphosed to hornfels east of the horst. Hunt (1938) recognized that this structure might be caused by intrusion of magma. Lipman et al. (1979) implied that the dome was related to intrusion of hornblende trachydacite magma (porphyry of San Jose Canyon) beyond the east margin of the dome. During our mapping, we found blocks of olivine gabbro within the cinder deposits of the pyroxene basaltic trachyandesite. This implies to us that the magma causing uplift of the dome is more likely gabbro than an intrusive equivalent of trachydacite (syentite).

A second but smaller domal feature named the Devil Canyon dome (Hunt, 1938), likely caused by subsurface intrusion of mafic magma, is found in upper Rinconada Basin. The core of this feature contains several mafic dikes, and Cretaceous units dip radially away from the approximate center of the dome. In additional, many small-displacement normal faults cut the rocks.

Most major faults in the Lobo Springs quadrangle are normal faults having a north to northeast trend probably responding to NW-SE extension along the boundary between the Colorado Plateau and Rio Grande rift tectonic provinces (Baldridge et al., 1983; Aldrich and Laughlin, 1984). Most dikes on the quadrangle have an east to northeast trend apparently intruding into weak zones created by the regional tectonic fabric. The dikes are not deformed.

HYDROTHERMAL ALTERATION

Weak hydrothermal alteration is found in many of the volcanic units on the southwestern flanks of Mount Taylor. Generally, the alteration is pale red to pink in color and consists of combinations of clay, silica, carbonate and Fe-oxides found in fractures, cavities and vugs. Two small areas of brick red alteration are found in the Gibson Coal Member on the west side of upper

Figure 9: Deposit of hydrothermal Fe-oxides overlying deformed Cretaceous rocks in southern core of San Fidel dome.

Rinconada Basin. The alteration consists of Fe- and Mn-oxides in shale and may have been produced by coal fires rather than hydrothermal fluids. A 3-m-thick coal bed is found within this area (Fig. 4). Fe- and Mn-oxides and travertine deposits are found on Cretaceous units in the exposed southern core of San Fidel dome (Fig. 9) and just southeast of Devil Canyon dome. Some of the Cretaceous beds seem to be slightly metamorphosed to hornfels. Possibly the hornfelsed rocks and hydrothermal deposits are caused by intrusion of shallow magma as mentioned above.

EXPLORATION WELLS AND CROSS SECTIONS

Several exploration wells were drilled in Lobo Springs quadrangle in search of hydrocarbons (oil, gas and coal) and uranium. We have used the drill logs from several of these wells to constrain the subsurface stratigraphy shown in the cross sections. The quality of these logs is highly variable and three logs have no original stratigraphic picks (Table 2). Our stratigraphic names in Table 2 and cross sections are based on the picks provided in the good well logs supplemented by stratigraphic names shown in Lucas and Zeigler (2003). Details of Dakota Formation stratigraphy are discussed in Owen and Owen (2003).

The most intriguing log is that of the State 36-1 well located in the heart of San Fidel dome. Originally drilled to 1167 feet in 1945 in search of oil, well 36-1 was re-drilled to 2953 feet in 1986. No significant hydrocarbons were found. The log and cuttings from the re-drill effort identify the tops of Dakota, Morrison, and Entrada units. In our examination of the log, anhydrite and carbonate are called out at 2730 feet, which we interpret as the top of the Todilto Formation. From our mapping, this well is spudded near the top of the Main Mancos Shale; thus, there must be a repeated section in the upper part of the well, which we have interpreted as caused by a thrust fault. Thrusting no doubt occurred during subjacent intrusion of mafic magma and uplift of the dome.

Four logs from wells in Rinconada Basin provide excellent stratigraphic information down to the Bluff Sandstone, Main Member. The two logs from wells in Coal Mine Basin are of very poor quality. From comparisons with the good logs we have picked the elevations at the tops of major stratigraphic units in the subsurface of the basin. Assuming our correlations are valid, it appears that many Upper Cretaceous units are thin in Coal Mine Basin relative to Rinconada Basin. This thinning is depicted in the cross sections.

We have lumped the Jurassic Morrison and Bluff Formations into one unit (called Jm) on the cross sections. Based on the thickness of this combined unit in the State 36-1 well, we have shown unit Jm at a standard thickness of 1000 ft in cross sections. We have also shown the Todilto and top of Entrada Formations on both cross sections because they are widespread units in west-central New Mexico. Cretaceous and Jurassic stratigraphy shown beneath the southwest flank of Mount Taylor in Section A-A' is extrapolated in part from surface mapping in nearby upper Rinconada Basin. The reader should keep these speculations and assumptions in mind when viewing the cross sections.

DESCRIPTION OF MAP UNITS

Note: Descriptions of map units are listed in approximate order of increasing age. Formal stratigraphic names of Cretaceous units are described by Sears et al. (1941), Lipman et al., (1979), and Dillinger (1990). Field identification of volcanic rocks is based on hand specimens, petrography and chemical data published by Hunt (1938), Baker and Ridley (1970), Lipman and Moench (1972), Lipman and Mehnert (1979), and Perry et al. (1990). The names of volcanic units are based on the above chemical data and the alkali-silica diagram of Le Bas et al. (1986). Unreferenced $Ar^{40/39}$ dates were provided by W. McIntosh and L. Peters (NMBG&MR). Soil

descriptions were made following methods discussed in Birkeland (1999). Soil texture and grain size data are based on field descriptions, including field measurements of stickiness and plasticity. Carbonate stage for soils follows nomenclature developed by Gile et al. (1966).

Quaternary

Qdi **Disturbed Area—**Anthropogenically disturbed area mapped only where extensive at pumice mine on east end of Grants Ridge; not shown in correlation chart or cross section; maximum thickness less than 10 m.

Qal **Alluvium—**Deposits of sand, gravel and silt in main valley bottoms; locally includes stream terraces, alluvial fans, and canyon wall colluvium; Valley floor alluvium is typically finer-grained, silt and sand dominated deposits with interbedded gravel beds, whereas low terrace deposits are predominantly sand and gravel. Valley floor alluvium and low terrace deposits are characterized by weakly developed soils with 10YR color, none to Stage I carbonate morphology, and lack of Bt horizon development. Qal is mostly Holocene in age; maximum thickness of various alluvium deposits is uncertain but may exceed 15 m.

Qt3 **Alluvium underlying Qt3 terrace surfaces—**Deposits of sandy pebble to boulder size gravel underlying terrace surfaces located approximately 5 to 15 m above local base level; Qt3 deposits in Lobo Canyon locally form strath terrace 2-3 m thick. Where not eroded, soils exhibit Stage I+ to II carbonate morphology, Bt horizon with 7.5YR color. Typically forms fill terraces with deposit thickness ranging from 4 to at least 14 m.

Qt2 **Alluvium underlying Qt2 terrace surfaces—**Deposits of sandy pebble to boulder size gravel underlying terrace surfaces located 20 to 30 m above local base level in Rinconada Canyon. Where not eroded, soils are well developed, exhibit Stage III carbonate morphology, Bt horizon with 5YR color. Typically forms fill terraces with deposit thickness ranging from 7 to 10 m or more; Qt2 deposits in Lobo Canyon locally form strath terrace 2-3 m thick.

Qt1 **Alluvium underlying Qt1 terrace surfaces—**Deposits of sandy pebble to boulder size gravel and interbedded oxidized quartz lithic sand underlying terrace surfaces located approximately 40 m above local base level in east Lobo Canyon. Soils are partially eroded, exhibit Stage II+ to III carbonate morphology, Bt horizon with 7.5YR to 5YR color. Forms both strath and fill terraces with deposit thickness ranging from 2 to 10 m or more.

Qc (Qco) **Colluvium—**Poorly sorted slope wash and mass wasting deposits from local sources; mapped only where extensive or where covering critical relations; thickness can locally exceed 15 m.

Qls **Landslides—**Poorly sorted debris that has moved chaotically down steep slopes; slumps or block slides partially to completely intact, that have moved down slope; slumps and block slides (toreva blocks) usually display some rotation relative to their failure plane; ages vary from Holocene to mid- to late-Pleistocene; thicknesses vary considerably depending on the size and nature of the landslide.

Qes **Eolian deposits—**Windblown and sheet wash deposits of silt and fine sand 0.2 to greater than 1 m thick on Horace Mesa; characterized by thin (20-30 cm thick) late Holocene deposits overlying discontinuous, buried middle Pleistocene eolian deposit approximately 1 m thick. Surficial soil is weakly developed with 10YR

color, none to Stage I carbonate morphology, and lack of Bt horizon development. Buried soil is well developed, with Stage III carbonate morphology, and a Bt horizon with 7.5YR color. Aggregate thickness of unit is ≤ 2.2 m.

Qafy **Younger alluvial fans—**Typically fan-shaped deposits of coarse to fine gravel and sand, silt, and clay within and at the mouths of valleys; associated with present drainages and usually not incised more than a few meters; grades into alluvial deposits along main channels; probably Holocene in age; maximum exposed thickness about 15 m.

Qafo **Older Alluvial fans—**Dissected fan-shaped deposits of coarse to fine gravel and sand, silt, and clay graded to a base level 10 m or more above the modern valley floor; Pleistocene age. An older fan complex lies on the north side of East Grants Ridge and includes a higher fan remnant graded to Qt1 (?); maximum exposed thickness about 15 m.

QTg **Older gravels—**Small, isolated patches of well rounded to angular granitic pebbles and rare cobbles that form a lag deposit on Cretaceous sedimentary rocks in a gap in the hogback in the northwestern corner of the map area. May possibly correlate with terrace deposit Qt1. Thickness is <1 m.

QTtr **Travertine—**Two relatively small exposures composed of grayish tan to light tan tufa (calcium carbonate) deposited by hot and/or mineral springs; the first exposure strikes 75° and is about 100 m in length; overlies the Mulatto Member of the Mancos Shale south of Devil Canyon dome in upper Rinconada Basin; thickness ≤5 m. The second exposure is also about 100 m in length and strikes 15°; overlies a fault juxtaposing Gibson Coal Member against Mancos Shale in the eastern portion of the exposed core of San Fidel dome; ages of travertine deposits are unknown but could be related to late Pliocene magmatism.

Tertiary (Pliocene)

Volcanic Rocks of Mount Taylor, Horace Mesa, Grants Ridge and Vicinity

Tytb **Younger trachybasalt—**Black to dark gray, fine-grained aphyric basalt and red to black cinder deposits (**Tytc**) having sparse to rare olivine phenocrysts. Unit consists of two distinct flow and cone complexes and a third buried flow in NW sector of map. Larger flows contain multiple flow units near source. Most specimens contain quartz xenocrysts, some with rinds of feathery, pale green clinopyroxene. Groundmass is intersertal to slightly trachytic. Microphenocrysts consist of olivine, augite, plagioclase and opaque oxides in abundant glass. Buried flow contains olivine with sparse rims of aegerine-augite. Lavas from the two cones flowed west to southwest and form most of the upper surface of eastern Horace Mesa. Overlies volcaniclastic sedimentary deposits (Tvs), various trachyandesite lavas (Tta, That), younger porphyritic trachybasalt (Typtb), and tuff of Grant's Ridge (Tgrt). Buried flow underlies Tta. Flow from southernmost cone is dated at 2.01 ± 0.05 Ma (Perry et al., 1990). Maximum thickness of flows is <60 m.

Typtb **Younger porphyritic trachybasalt—**Black to gray, medium-grained porphyritic basalt and black to red cinder deposits (**Typtc**) having phenocrysts of olivine and plagioclase. Unit consists of cinder cone and lava flows in east-central Horace Mesa. Many specimens contain quartz xenocrysts. Groundmass is intersertal. Microphenocrysts consist of plagioclase, olivine, augite, and opaque oxides in dark glass and sideromelane. Overlain by Tytb. Interbedded with Tvs. Overlies

younger xenocrystal trachybasalt (Tyxtb), hydromagmatic trachybasalt (Thtb), and tuff of Grant's Ridge (Tgrt). Flow and cone not dated. Maximum thickness is <60 m.

Tyxtb **Younger xenocrystal trachybasalt—**Black to gray, medium-grained porphyritic basalt having phenocrysts of olivine, plagioclase, and augite and very rare xenoliths (≤5 cm) of lower crustal (?) gneiss and mantle peridotite. Flows occur in central Horace Mesa. Source unknown but could be earliest flows from vent Typtc described above. Interbedded with Tvs. Flow not dated. Maximum thickness is <40 m.

Tymtb **Younger megacrystal trachybasalt—**Black to gray, medium-grained porphyritic hawaiite and red to black cinder deposits (**Tymtc**) having abundant megacrysts of augite and olivine and phenocrysts of olivine and plagioclase. Unit consists of cinder cone complex with exposed conduit and multiple flows on southern edge of La Jara Mesa. Unit also contains thin hydromagmatic beds (**Tymth**) exposed beneath flows to north and east of cone, partly north of quadrangle boundary. Texture is intersertal to slightly trachytic. Microphenocrysts consist of olivine, (titan) augite, plagioclase, and opaque oxides in glass. Olivine shows considerable iddingsite alteration. Overlies thin bed of trachydacite tuff (Ttdt) and older trachybasalt (Totb) along highway 457 just north of quadrangle boundary. Overlies tuff of Grant's Ridge along all of southern La Jara Mesa. $Ar^{40/39}$ date is 2.77 ± 0.06 Ma. Thickness of flows is <60 m.

Tta **Trachyandesite, undivided—**Multiple flows of gray to blue-gray, porphyritic lavas that originate from near the summit of Mount Taylor. Phenocrysts consist of resorbed plagioclase, potassium feldspar, oxidized clinopyroxene, hypersthene, sparse biotite, sparse oxidized hornblende, and magnetite in a pilotaxitic groundmass containing microphenocrysts of plagioclase, clinopyroxene, apatite, opaque oxides, and devitrified glass. May contain rare, small (≤5 mm) hornblende megacrysts. Some specimens show minor Fe-oxide alteration. Overlies small flow of Tytb and flows of hornblende trachyandesite (Thta). Interbedded with volcaniclastic sedimentary deposits (Tvs). Underlies flow of Tytb on upper north side of Rinconada Canyon. Flow near summit of Mount Taylor is dated at 2.60 ± 0.05 Ma (Perry et al., 1990). Exposed thickness is >215 m.

Thta **Hornblende trachyandesite—**Multiple flows of gray to yellow-gray to pale pink, porphyritic lavas with conspicuous hornblende megacrysts (≤5 cm). Three probable vents are identified on the SW flank of Mount Taylor but similar lavas occur elsewhere on Mount Taylor. Megacrysts consist of partly resorbed brown hornblende with partial jackets of magnetite. Phenocrysts consist of partly resorbed and complexly zoned plagioclase and plagioclase clots, clinopyroxene, magnetite, resorbed olivine, orthopyroxene, and oxidized hornblende in a trachytic to pilotaxitic groundmass having microphenocrysts of plagioclase, pyroxene, opaque oxides, apatite, and devitrified glass. Some specimens have plagioclase-pyroxene clots and clinopyroxene jackets over orthopyroxene. Underlies Tytb and Tta, and interbedded with Tvs. Overlies older trachybasalt (Totb) and basanite (Tba). Flow in northeastern part of quadrangle is dated at 2.52 ± 0.07 Ma (Perry et al., 1990). Long flow on northern edge of quadrangle has $Ar^{40/39}$ age of 2.60 ± 0.10 Ma. Maximum exposed thickness at least 275 m.

Tpetd **Porphyritic enclave-bearing trachydacite—**Thick, multiple flows of dark gray

to tan porphyritic lavas having conspicuous enclaves up to 50 cm in diameter. Lava contains phenocrysts of resorbed quartz, large potassium feldspar, plagioclase, oxidized hornblende and biotite in a pilotaxitic groundmass of plagioclase, potassium feldspar, quartz, biotite, hornblende, opaque oxides, minor clinopyroxene and fresh to devitrified glass. Enclaves consist of plagioclase, clinopyroxene, hornblende, magnetite, and vesiculated glass. Source of lavas is from obliterated vent in amphitheater of Mount Taylor. Most of unit occurs to east in Mount Taylor quadrangle. Underlies Tta and Thta. Overlies Tvs. $Ar^{40/39}$ age on sanidine is 2.48 ± 0.07 Ma. Maximum exposed thickness >200 m.

Tvs **Volcaniclastic sedimentary rocks—**Gray to tan to white debris flows, fluvial deposits and interbedded tuffs shed from the Mount Taylor stratovolcano during growth. Debris flow component is most abundant near source (NE) and consists primarily of boulders and cobbles of angular to subangular trachydacite and trachyandesite in a volcanic sand matrix. Boulders form a lag deposit on surface of debris flows. Fluvial component contains rounded to subrounded cobbles including a higher proportion of basaltic clasts, especially to SW. Tuffs consist mostly of thin beds and lenses of fall deposits with vesiculated pumice having phenocrysts of plagioclase, clinopyroxene ± hornblende ± biotite. Unit is interbedded with practically all lavas on southwest side of Mount Taylor and Horace Mesa. Underlies two cone and flow complexes of Tytb. Overlies pyroxene basaltic trachyandesite (Tbta) east of Rinconada Basin, tuff of Grant's Ridge (Tgrt), and basanite (Tba). Maximum exposed thickness is >200 m.

Ttdt **Trachydacite tuff—**Pyroclastic flow (ignimbrite), pyroclastic fall and reworked tuffs containing light gray to tan pumice with phenocrysts of plagioclase, potassium feldspar, clinopyroxene, orthopyroxene, biotite, and sparse hornblende. Texture is glassy, slightly porphyritic, and vesicular. Best exposure is on north side of upper Lobo Canyon where pyroclastic flow 3 m thick is interbedded in lower part of unit Tvs. Pumice blocks exceed 0.5 m in size and have $Ar^{40/39}$ date of 2.71 ± 0.06 Ma. Most outcrops consist of poorly exposed fall deposits in widely separated locations, generally <1 m but as much as 2 m thick. Pumice clasts are generally a few cm in size at most. Underlies Ttd, Tymtb, and Tatb. Tuffs generally occur within bottom half of Tvs. Overlies tuff of Grant's Ridge (Tgrt).

Typta **Younger plagioclase basaltic trachyandesite—**Flow of splotchy white and black porphyritic lava containing abundant, large (≤3 cm), often aligned plagioclase phenocrysts (plagioclase basalt of Perry et al., 1990). Texture is vesicular, intersertal to diktytaxitic. Larger phenocrysts are partly resorbed. Smaller phenocrysts consist of plagioclase, augite, and olivine in a groundmass containing microphenocrysts of plagioclase, titanaugite, olivine, opaque oxides, glass and sideromelane. Sources unknown but appear to be within the Mount Taylor stratovolcano. Underlies Tvs and overlies phenocryst-poor trachydacite (Ttd) and biotite-hornblende trachydacite (Tbhtd) on north edge of Rinconada Basin. Similar flow in adjacent Mount Taylor quadrangle has $Ar^{40/39}$ date of 2.76 ± 0.06 Ma. Maximum exposed thickness is about 30 m.

Ttd **Trachydacite—**Thick flow of rather aphyric lava containing minor plagioclase, clinopyroxene, and biotite phenocrysts. Underlies Tvs and Typta. Overlies trachydacite tuff (Ttdt), tuff of Grant's Ridge (Tgrt), and basanite (Tba) Unit dated at 2.64 ± 0.08 Ma (Perry et al., 1990). Maximum exposed thickness about 60 m.

Tatb **Aphyric trachybasalt—**Gray to blue gray, very fine-grained aphyric basalt and red to black cinder deposits (**Tatc**) having rare small phenocrysts of olivine in a slightly trachytic groundmass. A prominent en echelon feeder dike about 3 m wide trends E to NE from the flow and cone complex and contains more abundant and larger phenocrysts. Microphenocrysts consist of plagioclase, olivine, augite and opaque oxides in glass. Lavas are interbedded in Tvs. Dike cuts Tvs, Tgrt, and Upper Cretaceous Gibson Coal (Kcg). Dike is partially buried by a landslide complex (Qls). Unit is not dated. Maximum observed thickness is about 30 m.

Thtb **Hydromagmatic trachybasalt—**Gray to yellow gray beds of granular, quenched basalt containing small phenocrysts of olivine, plagioclase and augite. Source of eruption is probably in shallow north-trending basin filled with Qal on south side of central Horace Mesa. Beds are planer to wavy, show minor palagonite alteration, and contain lithic clasts of gravel from unit Tvs and angular clasts from older basalt flows. Beds underlie Typtb, Tatb, and Ttdt, and are interbedded in Tvs. Beds overlie Tgrt on SE side of Horace Mesa. Unit is not dated. Maximum exposed thickness is about 10 m.

Tbhtd **Biotite-hornblende trachydacite—**Brownish-gray to black, highly foliated flow of porphyritic lava containing phenocrysts of plagioclase, potassium feldspar, clinopyroxene, hornblende, biotite, and opaque oxides in a trachytic groundmass containing tiny, felted plagioclase, potassium feldspar, oxidized biotite, clinopyroxene, opaque oxides and glass. Contains rare quartz xenocrysts or resorbed phenocrysts. Underlies Typta, Thta and Tvs. Overlies Totb and Kcg. Flow in upper Rinconada Canyon has $Ar^{40/39}$ date of 3.26 ± 0.20 Ma. Maximum observed thickness is >140 m in upper Rinconada Canyon.

Tcptd **Coarse porphyritic trachydacite—**Pale pink to tan, very coarse porphyritic lava containing large (≤ 3 cm) phenocrysts of potassium feldspar. Unit superficially looks like granite and makes a distinctive fine gravelly soil. Smaller phenocrysts consist of magnetite, potassium feldspar, plagioclase, oxidized clinopyroxene, and apatite in a hyalopilitic groundmass of tiny felted plagioclase, potassium feldspar, clinopyroxene, opaque oxides and devitrified glass. Unit shows minor Fe-oxide alteration. Unit underlies Tta and probably That in extreme NE corner of quadrangle. Relations with other units in Mount Taylor stratovolcano are unclear. Unit is not dated. Maximum observed thickness is about 80 m.

Totb **Older trachybasalt—**Black to dark gray, fine-grained basalt and red to black cinder deposits (**Totc**) having sparse olivine and plagioclase phenocrysts in intersertal groundmass containing microphenocrysts of plagioclase, augite, olivine, opaque oxides and glass. Some flows have rare orthopyroxene microphenocrysts. Some flows have tiny (<1 mm) ovoid patches very rich in glass and opaque oxides. All flows may have rare quartz xenocrysts. Eroded cone on east side of Rinconada Basin has NNE-trending dike and fissure. Eroded cone on SE side of Horace Mesa contains NE-trending feeder dike. Underlies Typta and Tbhtd in upper Rinconada Basin. Interbedded with Tvs and other older trachybasalts. Underlies basaltic-rich volcaniclastic deposits in SW sector of quadrangle. Underlies pyroxene basaltic trachyandesite (Tpba) on east side of Rinconada Basin. Overlies Tgrt and Tba in upper Lobo Canyon. Oldest flow of this unit, originating from a very eroded cone in SW portion of the quadrangle, is dated at 3.24 ± 0.09 Ma (Laughlin et al., 1993). Maximum observed thickness >100 m.

Tphtd **Porphyritic hornblende trachydacite**—Pale gray to tan, massive to sheeted porphyritic lava with conspicuous large (≤1 cm) phenocrysts of plagioclase, some with apparent rapakivi texture. Additional phenocrysts are hornblende and clinopyroxene. Equivalent to porphyry of San Jose Canyon (Lipman et al., 1979). Intrudes Tptb and Topta on SW edge of Mount Taylor quadrangle. Sample from adjacent Mount Taylor quadrangle has $Ar^{40/39}$ date of 2.63 ± 0.10 Ma. Thickness of poorly exposed flow on SE edge of Lobo Springs quadrangle is about 20m.

Tptb **Pyroxene trachybasalt**—Gray, fine-grained flow and red to black cinder deposits (**Tptc**) containing conspicuous, large (≤1.5 cm), resorbed, very dark green clinopyroxene megacrysts (Lipman et al., 1979). Phenocrysts consist of plagioclase, olivine, clinopyroxene, and orthopyroxene in an intersertal groundmass containing plagioclase, olivine, clinopyroxene, opaque oxides, and glass. Many specimens contain quartz xenocrysts. Part of flow is uplifted by San Fidel dome and has resulting steep dip slope to north suggesting that doming post-dates eruption of the lava (Lipman et al., 1979). Eroded cinder cone is located west of uplift and contains rare blocks of fine- to medium-grained olivine-pyroxene gabbro (see unit Tgi below); one gabbro block has $Ar^{40/39}$ age of 3.10 ± 0.24 Ma. Lava underlies Tvs but overlies Totb, Topta, Tgrt, Upper Cretaceous Dalton Sandstone (Kcd) and the Mulatto Member of the Mancos Shale (Kmm). Unit has two $Ar^{40/39}$ dates of 2.78 ± 0.03 and 2.79 ± 0.06 Ma, respectively. Maximum exposed thickness is about 80 m.

Topta **Older plagioclase basaltic trachyandesite**—Flow of splotchy white and black porphyritic lava containing abundant large (≤2 cm), often aligned plagioclase phenocrysts. Resembles unit Typta but somewhat finer grained. Source of flow is unknown but presumably is located to the north. Underlies Tptb and overlies Kcd. Unit is not dated. Maximum exposed thickness is about 20 m.

Tvsb **Basaltic-rich volcaniclastic gravels**—Gray to tan fluvial deposits containing primarily subrounded to rounded clasts of trachybasalt and subordinate intermediate composition volcanic rocks. Gravels also contain fragments of rhyolite, chert, and Precambrian rocks. Located only in SW sector of Horace Mesa. Interbedded with older trachybasalts. Maximum exposed thickness about 25 m.

Toxtb **Older xenocrystal trachybasalt**—Black to gray, medium-grained basalt and red to black cinder deposits (**Toxtc**) with rare cumulate (?) clots of plagioclase, olivine, and augite. Some clots have melted rinds consisting of feldspar, quartz, and pyroxene. Phenocrysts consist of abundant small olivine, plagioclase, and augite in an intersertal groundmass containing microphenocrysts of plagioclase, olivine, augite, opaque oxides, and glass. Many vesicles contain opal and calcite. Younger flow and cone deposits of Totb mostly bury eroded cinder cone deposits. Overlies Tgrt and Kcg. Unit is not dated. Maximum exposed thickness is about 35 m.

Tomtb **Older megacrystal trachybasalt**—Dark gray, fine-grained basalt and red to black cinder deposits (**Tomtc**) containing sparse 1 cm megacrysts of dark green augite. Phenocrysts consist of olivine, plagioclase, rare augite and magnetite in an intergranular to trachytic groundmass of olivine, plagioclase, augite, opaque oxides, glass, and sideromelane. The olivine is altered to iddiingsite. Groundmass contains some tiny (<1 mm) orbs of alkali feldspar, opaque oxides and glass. Fissure and dike extends from NE side of cinder cone. Overlies Totb, Tvs, Tgrt, and Kcg. Unit is not dated. Maximum exposed thickness is >100 m near vent.

Toptb **Older porphyritic trachybasalt**—Black to gray basalt and red to black cinder deposits (**Toptc**) with conspicuous olivine and plagioclase phenocrysts. Texture is intersertal to slightly trachytic. Groundmass contains plagioclase, olivine, augite, opaque oxides, and glass. Olivine shows iddingsite alteration. Overlies Totb, Tgrt, and Kcg. Flow and cone complex in northern part of quadrangle is dated at 2.89 ± 0.07 Ma (Perry et al., 1990). Maximum exposed thickness is >100 m near vent.

Tgro **Rhyolite of Grants Ridge**—Light gray to white, sparsely porphyritic lava containing phenocrysts of potassium feldspar, plagioclase, and very rare quartz. Microphenocrysts consist of potassium feldspar, plagioclase, biotite and quartz. Texture is massive to flow banded. Some zones are spherulitic; others contain mariolitic cavities with quartz, alkali feldspar, hematite, garnet, and topaz. The north lower flank of the dome contains a zone rich in sparsely porphyritic obsidian. Overlies Tgrt, Kcg and Kcd. Unit is dated at 3.34 ± 0.16 Ma from unknown location (Lipman and Mehnert, 1979). Maximum exposed thickness is >100 m.

Tgrt **Rhyolite Tuff of Grants Ridge**—White to pale pink, bedded pyroclastic fall, flow and surge deposits; some beds have abundant aphyric obsidian clasts. Most lithics consist of pink to gray Precambrian granite and gneiss, chert, sandstone, limestone and rare basanite. Pumice clasts are glassy to slightly devitrified with very rare phenocrysts of potassium feldspar. Pyroclastic fall and flows thicken towards and underlie Grants Ridge rhyolite indicating that source of tuff is beneath the rhyolite, although Shackley (1998) suggests that the tuff may originate from rhyolite centers deep within Mount Taylor. Underlies a wide variety of units. Overlies basanite (Tba), Kcg and Kcd. Obsidian clasts from upper tuff beds beneath Mesa La Jara have $Ar^{40/39}$ date of 3.26 ± 0.04 Ma. Maximum observed thickness is about 110 m.

Tba **Basanite**—Black to gray, fine-grained lava with tiny microphenocrysts of iddingsitized olivine and sparse magnetite. Texture is intergranular; has splotchy, fine, ophitic patches of plagioclase and glass. Groundmass contains abundant fine magnetite, plagioclase, titan augite and analcime. Contains ovoid patches of late-stage sodic plagioclase and what appears to be aegerine-augite. Cracks and fractures are locally filled with chalcedony and opal. Source vent is not identified but appears to be located somewhere beneath Mount Taylor. Underlies Tgrt and Tvs. Overlies Kcg and Kcd. Flow beneath east side of Horace Mesa is dated at 3.73 ± 0.09 Ma (Perry et al., 1990). Flow beneath west side of Horace Mesa has $Ar^{40/39}$ date of 3.64 ± 0.15 Ma. Maximum observed thickness is about 40 m.

Volcanic Dikes and Small Plugs

Tbad **Basanite**—Black, fine-grained dikes with tiny microphenocrysts of iddingsitized olivine in southern Rinconada Canyon; generally <1.5 m wide; sometimes appear as doublet dikes about 10 m apart; intrudes Cretaceous rocks; dikes not dated.

Tpd **Picrite**—Splotchy, yellow and black, porphyritic, 1-m-wide dike with >20% olivine phenocrysts. Also contains minor augite and sparse, resorbed plagioclase phenocrysts in an intergranular groundmass of olivine, augite, plagioclase, opaque oxides and devitrified glass. Olivine and pyroxene are altered to clay-chlorite-serpentine (bowlingite); amygdules are filled with calcite-chalcedony-clay; fractures contain Fe-oxides. Dike trends nearly E-W and is located just west of San Fidel dome, possibly predating the dome but dike is not dated.

Ttbd **Trachybasalt—**Black fine-grained dikes with microphenocrysts of olivine, augite and plagioclase. Some dikes contain abundant quartz xenocrysts. Dikes generally <1 m wide and trend NE, but none are dated.

Tgi **Gabbro intrusive—**Dark gray, fine-grained, allotriomorphic-granular gabbro consisting of black clinopyroxene, pale gray to white plagioclase, and minor altered olivine. Forms small, circular intrusive body 50 m in diameter on isolated hill west of Rinconada Canyon. Resembles rare, fine-grained gabbro blocks near base of cinder cone deposits associated with unit Tptb.

Ttcbd **Trachyandesite—**Gray, fine-grained, 1-m-wide dike and a small, 30-m-wide plug with megacrysts of dark green clinopyroxene. Contains small phenocrysts of clinopyroxene and plagioclase in an intersertal to slightly trachytic groundmass of plagioclase, clinopyroxene, opaque oxides, and devitrified glass. Contains small, resorbed xenocrysts of quartz and tiny ovoid clots of alkali feldspar opaque oxides and glass. Dike trends nearly E-W cutting prominent N-S-trending fold in Cretaceous rocks in NW part of quadrangle. Plug is found in eastern part of Coal Mine Basin. Dike and plug are not dated.

Ttdd **Trachydacite—**Pale tan to gray, fine-grained, lava with very sparse, small phenocrysts of plagioclase. Forms small, E-W-trending, plug-like body surrounded by Qal in SW part of quadrangle. Unit is not dated.

Cretaceous

Crevasse Canyon Formation

Kcg (Kgi) **Gibson Coal Member—**Interbedded black to brown siltstone, thin to medium bedded tan, golden-yellow, brown, and greenish gray sandstone, and black coal. The sandstones are composed of well to moderately sorted, very fine- to medium-grained angular to subrounded quartz grains with < 10% mafic minerals and <1% clay (litharenite). The sandstone beds are cross-bedded, ranging from trough cross-beds to large-scale, low amplitude planar cross-beds. Ripple marks are locally preserved. Mud clast conglomerates frequently occur at the base of the sandy intervals. Bioturbation is rare. Elliptical to spherical fractured siderite to goethite concretions with calcite (or more rarely, barite) fill fractures and are present throughout the unit (Figure 10). Petrified wood fragments are common; logs up to 10 cm in diameter and 0.5 m long are locally preserved (Figure 11). The coal beds are generally < 0.5 m thick. A volcanic ash bed that is 2 to 4 cm thick is interbedded with coal at UTM coordinates 254819 3901134 (NAD27)(Figure 12). The lower contact is gradational with the underlying Dalton Sandstone Member; the top is not exposed. Maximum exposed thickness is roughly 350 m.

Kcd (Kd) **Dalton Sandstone Member—**Forms two prominent cliffs, a lower yellowish-orange cliff and an upper white cliff with an intervening short slope (doublet). The basal sandstone near the contact with the underlying Mulatto Tongue of the Mancos Shale often has thin beds containing abundant pelecypods casts and molds. The carbonate-cemented basal sandstone is composed of well-sorted, very fine-grained angular quartz grains with < 5% mafic minerals and <1% clay. The weakly cemented upper sandstone consists of well sorted, fine-grained, angular to subrounded quartz grains with <1% lithics and 7 to 10% feldspar. The upper and lower contacts are gradational with the overlying Gibson Coal Member of the Crevasse Canyon Formation and the underlying Mulatto Tongue of the Mancos Shale. Maximum exposed thickness is ≤25 m.

Kcs (Ks, Kst) **Stray Sandstone Member—**Forms two prominent reddish-orange cliffs with an intervening short slope (doublet). On a fresh surface, this medium-bedded, planar cross- bedded sandstone is white to yellowish gray. This sandstone is composed of well to moderately sorted, very fine- to medium-grained angular quartz grains with < 1% mafic minerals and <1% clay. The top of the Stray Sandstone is a thin

Figure 10. Iron concretion in Gibson Coal Member sandstone south of Coal Mine campground.

Figure 11. Petrified wood from Gibson Coal Member.

Figure 12. Volcanic ash in Gibson Coal Member.

(<1 m) conglomerate with pebbles to cobbles of quartzite, chert, and quartz. The upper and lower contacts are gradational with the overlying Mulatto Tongue of the Mancos Shale and the underlying Dilco Coal Member of the Crevasse Canyon Formation. Maximum exposed thickness is ≤40 m.

Kcdc (Kdi) **Dilco Coal Member—**Interbedded black to brown siltstone, thin to medium bedded tan, brown, and olive-green sandstone, and black coal. The sandstones are composed of well to moderately sorted, very fine- to fine-grained angular quartz grains with < 5% mafic minerals, 1 to 5% muscovite, and 1-5 % potassium feldspar altered to clay. The sandstones are cross-bedded to ripple laminated. Elliptical to spherical fractured siderite to goethite concretions, with calcite (or more rarely, barite) filling the fractures are present throughout the unit. The coal beds are < 0.5 m thick and are usually in the lower part of the unit. The upper and lower contacts are gradational with the overlying Stray Sandstone of the Crevasse Canyon Formation and the underlying main body of the Gallup Sandstone. Maximum exposed thickness is ≤150 m.

Gallup Sandstone

Kgm **Main body—**Yellowish gray, white, or golden yellow, medium to thick-bedded, cross-bedded sandstone. The sandstone consists of moderately sorted, fine to very fine-grained angular to subrounded quartz grains with < 5% mafic minerals, 1 to 2% muscovite, plant debris, and potassium feldspar altered to clay (10 to 30%). Often the sandstone beds are bioturbated with ~1.0 cm diameter cylindrical, vertically oriented burrows. Carbonaceous shale is intercalated with the sandstone. Locally contains fossiliferous (*Innocermid*) beds near the top. Faint, very low angle trough cross beds occur locally in sets less than 0.25 m thick, with azimuth of 010° (northerly flow). Beds are primarily planar-tabular or laminated. The lower contact is gradational with Mancos Shale and the upper contact is gradational with the Dilco Coal Member of the Crevasse Canyon

Formation. Maximum exposed thickness is ≤25 m.

Kgu **Upper tongue**—White medium-bedded, cross-bedded to tabular sandstone that is locally capped by well-cemented, fractured, brown-weathering, planar cross-bedded sandstone. The brown sandstone is carbonate cemented; the weakly cemented white sandstone does not react to hydrochloric acid. The sandstone consists of well-sorted, fine-grained angular quartz grains with < 5% mafic minerals and potassium feldspar altered to clay (15 to 25%). The white arkosic sandstone has no muscovite, but the brown capping sandstone has trace amounts of muscovite and biotite. Trough cross beds occur in sets less than 0.5 m thick and have azimuths of 025° (northeastern flow direction). Cross beds are moderately steeper than those in unit Kgi (described below). Local internal scour surfaces are present. Hematitic concretions and stained surfaces occur throughout unit. The upper and lower contacts are gradational with Mancos Shale. Maximum exposed thickness is ≤30 m.

Kgl **Lower tongue**—White medium-bedded, cross-bedded to tabular sandstone that is locally capped by well-cemented, fractured, brown-weathering, planar cross-bedded sandstone. Brown sandstone is carbonate cemented; the weakly cemented white sandstone does not react to hydrochloric acid. The sandstone is composed of well to moderately sorted, fine to very fine-grained angular quartz grains with < 5% mafic minerals and potassium feldspar altered to clay (10 to 15%). The white subarkosic sandstone has no muscovite, but the brown capping sandstone has trace amounts of muscovite. Cross bed sets are 0.5 meters thick, low angle trough cross beds, with azimuths of 150° (southeastern flow direction). The top of unit is locally conglomeratic with sandstone clasts and sharks teeth. The upper and lower contacts are gradational with Mancos Shale. Maximum exposed thickness is ≤15 m.

Mancos Shale

Kmm **Mulatto Tongue**—Golden yellow, thin-bedded, tabular to ripple-laminated sandstone and black shale. Burrows and scattered pelecypod molds are common in the sandstone beds. Moderately to well sorted, very fine-grained angular to very well-rounded quartz grains with < 1% mafic minerals, ~1% muscovite, and abundant clay (~30%). Coarse to very coarse sandstone beds near the basal contact with the Stray Sandstone and lenses of conglomerate with well-rounded pebbles of black and white chert and black quartzite are locally present. Upper and lower contacts are gradational with the Dalton and Stray Sandstone members of the Crevasse Canyon Formation. Maximum exposed thickness is ≤50 m.

Km **Main body**—Black to dark brown shale and silty shale intercalated with finely laminated to cross-bedded thinly bedded sandstone. The sandstones are well-sorted, fine-grained quartz arenites. Upper and lower contacts are gradational. Small tongues of Main Mancos are interbedded within the Gallup Sandstone units. Maximum exposed thickness of Main Mancos beneath Gallup Sandstone is ≤50 m. Maximum drilled thickness including Bridge Creek Limestone (described below) is roughly 145 m (Table 2).

Kmb **Bridge Creek Limestone**—Finely laminated, fossiliferous, light gray limestone interbedded with thin black shale below the Main body of the Mancos Shale. Identified only in narrow horst on east side of exposed core of San Fidel dome where it overlies Twowells Sandstone; in fault contact with other units. Correlative with the Greenhorn Limestone. Contains abundant invertebrate fossils including *Pycnodonte* aff. *P. kellumi*, *Exogyra levis*, *Plicatula* cf. *P.*

hydrotheca, cf. *Caryocorbula* and *Turritella* sp. (Barry Kues, University of New Mexico, personal communication). Unit is moderately hornfelsed from subjacent magmatic intrusions and displays minor hydrothermal alteration, particularly along fractures and planer zones of permeability. Maximum exposed thickness is ≤25 m.

Dakota Formation

Kdt **Twowells Sandstone—**White, well-sorted sandstone with angular grains below the Bridge Creek Limestone exposed in horst on east side of exposed core of San Fidel dome. Some of the sandstone is cherty and displays pink silicic alteration due to proximity of subjacent magmatic intrusions; in fault contact with other units. Maximum exposed thickness is 7 m. Maximum drilled thickness is ≤60 m but this includes interbedded Mancos Shale beneath the unit.

Kd **Dakota Formation, undivided (cross sections only)—**Alternating sandstones and shales of Dakota Formation and Mancos Shale; Dakota units identified in well logs (top to bottom) as Twowells, Paguate, Cubero, and Oak Canyon sandstones (see Table 1 of Owen and Owen, 2003). Aggregate thickness is about ≤140 m.

Jurassic

Morrison Formation

Jm **Morrison Formation, undivided (cross sections only)—**Alternating sandstones and shales identified only in drill holes; as defined here includes Jackpile Member, Brushy Basin Member, Salt Wash Member, Recapture Member, and Main Body Bluff Sandstone (see Lucas and Zeigler, 2003). Aggregate thickness is ≤300 m but only one well penetrates the entire formation (Table 2).

Todilto Formation

Jt **Todilto Formation, undivided (cross sections only)—**Bedded, massive anhydrite and limestone identified only in one well (Table 2). Because this is a widespread unit throughout west-central New Mexico, it is shown in the cross sections; thickness is assumed to be uniform at ≤25 m.

Entrada Sandstone

Je **Entrada Sandstone, undivided (cross sections only)—**Massive, bedded to cross-bedded sandstone identified in only one well (Table 2). As defined here, includes only the Slick Rock Member (Lucas and Zeigler, 2003). Because this is a widespread unit throughout west-central New Mexico, it is shown in the cross sections; bottom of unit was not penetrated.

REFERENCES

Aldrich, M.J., Jr., and Laughlin, A.W., 1984, A model for the tectonic development of the southeastern Colorado Plateau boundary. Journal of Geophysical Research, v. 89, p. 10,207-10,218.

Baker, I., and Ridley, W.I., 1970, Field evidence and K, Rb, Sr data bearing on the origin of the Mt. Taylor volcanic field, New Mexico, USA. Earth and Planetary Science Letters, v. 10, p. 106-114.

Baldridge, W.S., Bartov, Y., and Kron, A., 1983, Geologic map of the Rio Grande rift and southeastern Colorado Plateau, New Mexico and Arizona. American Geophysical Union, Washington, D.C., 1:500,000 scale (color).

Birkeland, P. W., 1999, *Soils and Geomorphology*, *Third Edition.* Oxford University Press, Oxford, 430 p.

Bryan, K., and McCann, F.T., 1938, The Ceja del Rio Puerco - A border feature of the Basin and Range province in New Mexico, Pt. II, Geomorphology. Journal of Geology, v. 46, p. 1-16.

Crumpler, L.S., 1980a, Alkali basalt through trachyte suite and volcanism, Mesa Chivato, Mount Taylor volcanic field, New Mexico, Part I. Geological Society of America Bulletin, v. 91, p. 253-255.

Crumpler, L.S., 1980b, Alkali basalt through trachyte suite and volcanism, Mesa Chivato, Mount Taylor volcanic field, New Mexico, Part II. Geological Society of America Bulletin, v. 91, p. 1293-1313.

Crumpler, L.S., 1982, Volcanism in the Mount Taylor region, in *Albuquerque Country II*, New Mexico Geological Society, 33rd Field Conference Guidebook, p. 291-298.

Dillinger, J.K., 1990, Geologic map of the Grants 30' x 60' Quadrangle, west-central New Mexico. U.S. Geological Survey, Coal Investigations Map C-118-A, 1 sheet, 1:100,000 scale (color).

Drake [Drakos], P.G., Harrington, C.D., Wells, S.G., Perry, F.V., and Laughlin, A.W., 1991, Late Cenozoic geomorphic and tectonic evolution of the Rio San Jose and tributary drainages within the Basin and Range/Colorado Plateau transition zone in west-central New Mexico, in (Julian, B. and Zidek, J., eds.), *Field guide to excursions in New Mexico and adjacent areas of Texas and Colorado.* N. M. Bureau of Mines and Mineral Resources Bulletin 137, Socorro, p. 149-157.

Gile, L., Peterson, F. F., and Grossman, R. B., 1966, Morphologic and genetic sequences of carbonate accumulation in desert soils. Soil Science, v. 101, p. 347-360.

Grimm, J.P., 1983, The late Cenozoic history of the Lobo Canyon drainage basin, Mount Taylor volcanic field, New Mexico, in (Wells, S.G., Love, D.W., and Gardner, T.W., eds.), *Chaco Canyon Country.* American Geomorphological Field Group Field Trip Guidebook, northwestern New Mexico, p. 45-50.

Grimm, J.P., 1985, The late Cenozoic geomorphic history of the Lobo Canyon area of the Mount Taylor volcanic field, Cibola County, New Mexico. University of New Mexico, unpublished Master's thesis, 159 p.

Hunt, C.B., 1938, Igneous geology and structure of the Mount Taylor volcanic field, New Mexico. U.S. Geological Survey, Professional Paper 189-B, p. 51-80.

Keating, G.N., and Valentine, G.A., 1998, Proximal stratigraphy and syn-eruptive faulting in rhyolitic Grants Ridge Tuff, New Mexico, USA. Journal of Volcanology and Geothermal Research, v. 81, p. 37-49.

Le Bas, M.J., Le Maitre, R.W., Streckeisen, A., and Zanettin, B., 1986, A chemical classification of volcanic rocks based on the total alkali-silica diagram. Journal of Petrology, v. 27, p. 745-750.

Laughlin, A.W., Perry, F.V., Damon, P.E., Shafiqullah, M., WoldeGabriel, G. McIntosh, W., Harrington, C.D., Wells, S.G., and Drake, P.G., 1993, Geochronology of Mt. Taylor, Cebollita Mesa, and Zuni-Bandera volcanic fields, Cibola County, New Mexico. New Mexico Geology, v. 15, p. 81-92.

Lipman, P.W., and Moench, R.H., 1972, Basalts of the Mt. Taylor volcanic field, New Mexico. Geological Society of America Bulletin, v. 83, p. 1335-1344.

Lipman, P.W., and Menhert, H.H., 1979, Potassium-argon ages from the Mount Taylor volcanic field, New Mexico. U.S. Geological Survey, Professional Paper 1124-B, 8 pp.

Lipman, P.W., Pallister, J.S., and Sargent, K.A., 1979, Geologic map of the Mount Taylor Quadrangle, Valencia County, New Mexico. U.S. Geological Survey, geologic quadrangle map GQ-1523, 1 sheet, 1:24,000 scale (color).

Lucas, S.G., and Zeigler, K.E., 2003. Stratigraphy of west-central New Mexico in (Lucas, S.G., Semken, S.C., Berglof, W.R., and Ulmar-Scholle, D.S., eds.) *Geology of the Zuni*

Plateau. New Mexico Geological Society 54th Annual Field Conference, Socorro, back inside cover plate.

Moench, R.H., 1963, Geologic map of the Laguna quadrangle, New Mexico. U.S. Geological Survey, Geologic Quadrangle Map GQ-208, 1 sheet, 1:24,000 scale.

Moench, R.H., and Schlee, J.S., 1967, Geology and uranium deposits of the Laguna district, New Mexico. U.S. Geological Survey, Professional Paper 519, 117 p.

Owen, D.E., and Owen, D.E., Jr., 2003, Stratigraphy of the Dakota Sandstone and intertongued Mancos Shale along the southern flank of the San Juan Basin, west-central New Mexico in (Lucas, S.G., Semken, S.C., Berglof, W.R., and Ulmar-Scholle, D.S., eds.) *Geology of the Zuni Plateau*. New Mexico Geological Society 54th Annual Field Conference, Socorro, p. 325-330.

Perry, F.V., Baldridge, W.S., DePaolo, D.J., and Shafiqullah, M., 1990, Evolution of a magmatic system during continental extension: The Mount Taylor volcanic field, New Mexico. Journal of Geophysical Research, v. 95, p. 19,327-19,348.

Sears, J.D., Hunt, C.B., and Hendricks, T.A., 1941, Transgressive and regressive Cretaceous deposits in southern San Juan Basin, New Mexico. U.S. Geological Survey, Professional. Paper 193-F, p., 101-121.

Shackley, M.S., 1998, Geochemical differentiation and prehistoric procurement of obsidian in the Mount Taylor volcanic field, northwest New Mexico. Journal of Archaeological Science, v. 25, p. 1073-1082.

WoldeGabriel, G., Keating, G.N., and Valentine, G.A., 1999, Effects of shallow basaltic intrusion into pyroclastic deposits, Grants Ridge, New Mexico, USA. Journal of Volcanology and Geothermal Research, v. 92, p. 389-411.

COVER PHOTO AND TABLE CAPTIONS

Cover Photo: View to northeast of Mount Taylor volcano looking across SW Horace Mesa photographed on a stormy day in September 2007. The golden grassy slopes on flanks of Mount Taylor are underlain mostly of trachyandesite and trachydacite lavas. Cinder cone on Horace Mesa surmounts trachybasalt lavas that underlie the forested mesa surface.

Table 1: Summary of soil morphology described during this project.

Table 2: Exploration well data used for cross sections. All elevations and depths are in feet. Wells are listed from northwest to southeast.

Additional Figures For Map Sheet: Two cross-sections, A-A' and B-B'.